Thank you for purchasing our product.

Please read this assembly instruction sheet before you assemble this product. Make sure that all the parts listed on this sheet are included in the carton. This will make the assembly process quicker.

For missing, damaged or defective parts, simply scan the QR code below and follow the instructions for warranty service.

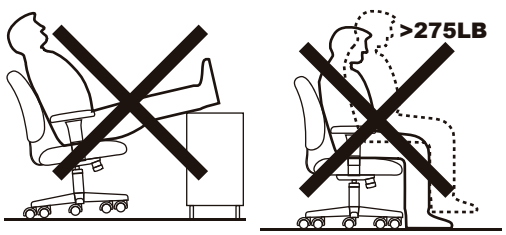

Insert and loosely tighten all screws. When assembly is completed, fully tighten all screws before using. This chair is only intended for sitting. Any other use will void the warranty.

Customer Service Hotline: 800.593.1888

For further assembly instructions, please visit www. bosschair.com

Power bank is not included with the product.

待定

MODEL:BGCL100



①x1	②x1	③x1	④x1
 Back Cushion	 Seat Cushion	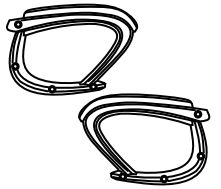 Left-Arm-LRight-Arm-R	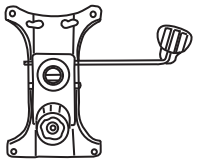 Mechanism
⑤x1	⑥x1	⑦x5	Ⓐ x4  M8*22 MECHANISM SCREW
 Gas Lift W/ Cover	 Base	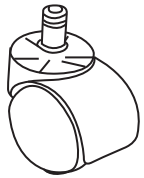 Caster	Ⓑ x8  M6*25 ARM SCREW
			Ⓒ x8  ARM CAP

1

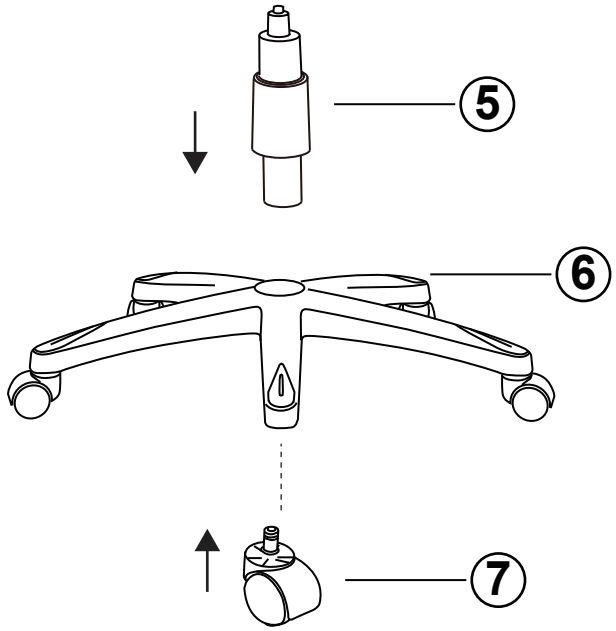
5
6
7

2

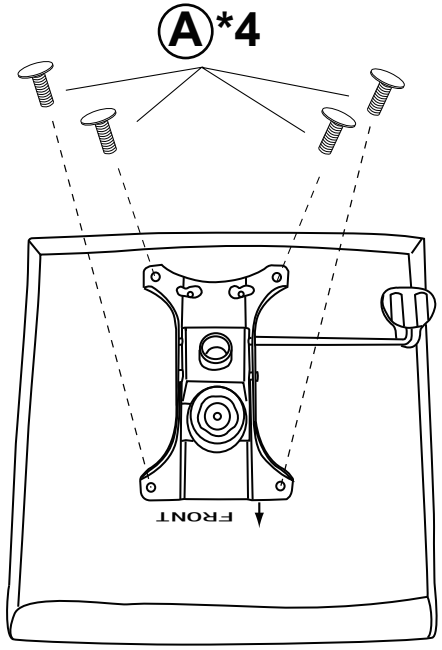
A*4
FRONT

3

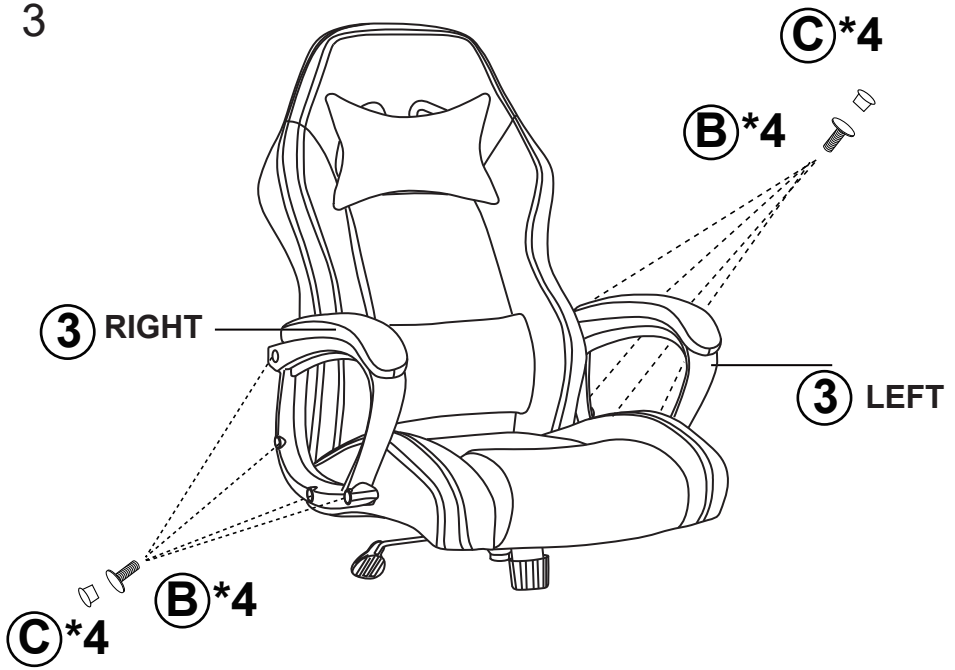
C*4
B*4
3 RIGHT
3 LEFT
B*4
C*4

4

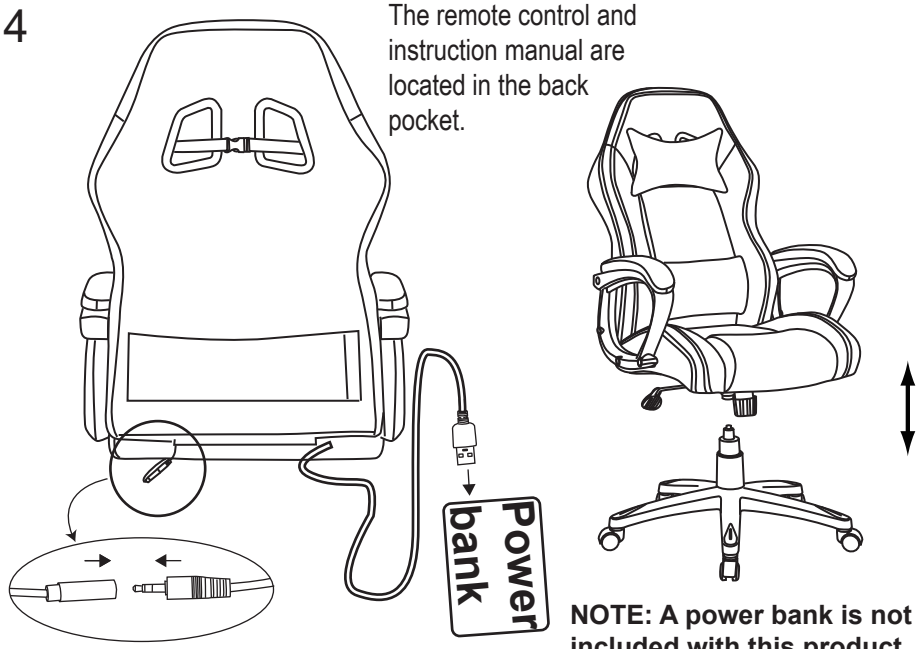
The remote control and instruction manual are located in the back pocket.
Power bank
NOTE: A power bank is not included with this product.